Gravitational-Wave Mission Phasemeter Technology Development

PI: William Klipstein, JPL

Description and Objectives:

- Advance technology readiness level (TRL) of phase-measurement electronics and demonstrate performance in upgraded interferometer-system-level test-bed providing signals representative of gravitational-wave missions, such as the *Laser Interferometer Space Antenna* (LISA)

Key Challenge/Innovation:

- High-strain sensitivity requires micro-cycle/Hz$^{1/2}$ precision on a 4-18 MHz beat-note in the presence of laser frequency noise and local clock noise
- We have demonstrated such phase readout in an interferometer test-bed and plan to mature the technology

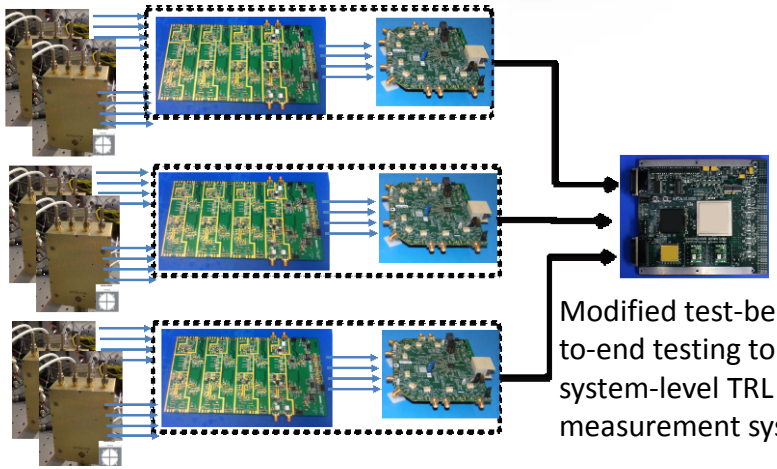

Modified test-bed for end-to-end testing to advance system-level TRL of phase measurement system

Approach:

- Advance component technologies
  - Advance maturity of analog signal chain
  - Demonstrate wave-front sensing with quadrant photo-receivers
  - Complete design trade for reducing photo-receiver size
- System-level testing
  - Modify interferometer test-bed to include low-light signals
  - Replace COTS components in interferometer test-bed with higher-TRL units and demonstrate performance

Key Collaborators:

- Jeff Dickson, Brent Ware, Bob Spero, Kirk McKenzie, Glenn de Vine, Andrew Sutton (JPL)

Development Period:

- April 2014 – March 2016

Accomplishments and Next Milestones:

- Design 2nd generation analog signal chain (Nov 2014)
- Build 2nd generation analog signal chain (Feb 2015)
- Demonstrate wave-front sensing (Sep 2015)
- Implement quadrant photo-receivers in existing test-bed (Dec 2015)

Applications:

- Inter-spacecraft laser interferometry
- Interferometer readout electronics with picometer precision
- Future space mission, e.g., LISA
- Capability supports other interferometry concepts (e.g., exo-planet finding)

$TRL_{In} = 4$ $TRL_{Current} = 4$ $TRL_{Target} = 5$